Suhartoyo, et.al., *ARRUS Journal of Engineering and Technology*, Vol. 2, No. 1 (2022)
https://doi.org/10.35877/jetech706

OPEN ACCESS

ISSN : 2776-7914 (Print) / 2807-3045 (Online)

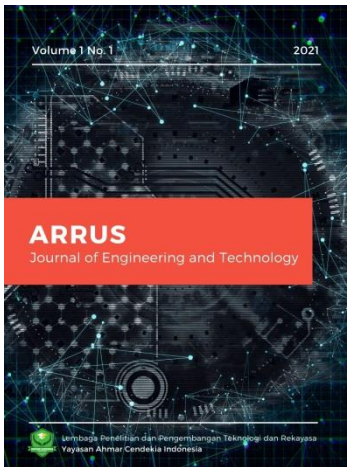

*Corresponding author: Suhartoyo, Mechanical Engineering, STT Warga Surakarta,Indonesia

E-mail: suhartoyo@sttw.ac.id

RESEARCH ARTICLE

Efforts to Reduce the Temperature of the Coolant in the Radiator with PCM

Suhartoyo

Mechanical Engineering, STT Warga Surakarta,Indonesia

Abstract: This study aims to determine the effect of using PCM in reducing the temperature of the water entering the radiator from the engine. Two types of PCM used are made of aluminum and ST 37 steel. They are made like a box measuring 8 cm x 8 cm with a thickness of 2 mm, the center hole is 3.5 cm in diameter, totaling eight pieces. The Machine used is L 300 Colt engine. The results of the study explained that the decrease in engine temperature after using PCM reached 17.5^{0}C. While the use of PCM is very effective where the water coming out of the machine can be reduced by 17,83^{0}C. Engine speed at stationary conditions (800 rpm – 1100 rpm) aluminum PCM is more effective, but at engine speed starting (1250 rpm – 2000 rpm), the effective PCM is ST 37 steel.

Keywords: PCM, aluminum, temperature, ST 37 steel, machine.

1. Introduction

Advances in technology, especially automotive, are extraordinarily advanced, technology developed is very indulgent for motorists. The technology developed in the automotive world is in line with the development of the trend in people's lives.

The advancement of the automotive sector is a growing demand and trend for automotive users themselves. The development of the automotive, of course, must pay attention to and prioritize quantity and quality. One of the qualities that must be developed is that it is safe for drivers and passengers, environmentally friendly, and has high efficiency. Another major thing is toughness in a wide range of mileage and the long life of engine parts. The development that has been carried out is in the electrical system section, which now uses the Electronic Control Unit (ECU) system, with the ECU which is an electronic circuit so that it is easy to control and linkage between parts in the unit. Fuel has also begun to be developed for the use of renewable fuels, the use of ethanol and methanol is an effort to improve engine performance (Nugroho, 2015) (Nugroho, 2021). It can improve the performance of the combustion engine and of course, the hope is that it is more environmentally friendly. A good lubrication system of course also affects the life of the engine part of the combustion engine. The lubrication and cooling system in the combustion engine is an important part, considering that its main function is to absorb heat as well as to perform coating and lubrication. Both systems are the basis of the machine's work to do work and effort, to protect the machine so that it does not wear out quickly, does not interfere with engine performance, and the life of engine parts is longer so lubrication is needed (Dalimunthe, 2019).

The engine cooling system on the combustion engine uses a system such as a heat exchanger which functions as a heat exchanger. The heat from the combustion engine will be absorbed by water and then removed by the radiator fins (Saputra; et al., 2018), but if the work of the

This open access article is distributed under a Creative Commons Attribution (CC-BY-NC) 4.0 license.

ISSN : 2776-7914 (Print) / 2807-3045 (Online)

radiator is not good it can cause overheating. The cause of this condition includes a problematic cooling system.

The component of the cooling system that often has problems is the radiator, Performance of the radiator is often problematic due to the occurrence of crust. The technology developed is to use coolant fluid, the liquid is safe to use so far, does not cause rust and blockage. To reduce the fluid entering the radiator, the temperature is too high, a tool called Phase Change Material (PCM) is installed as a tool to absorb heat from the liquid and then release it into the air (Amin; & Putra, 2016). PCM is in the form of fins made of materials that have good thermal conductivity values. Because of the importance of cooling for the engine and reducing the causes of damage due to overheating, it is necessary to research the use of PCM. For the PCM to work optimally, it must have a contact area with hot fluid to be absorbed and have parts that quickly release heat (Abuska; et al., 2019).

To prevent excessive heat, motor vehicle owners/users usually do this by adding other substances/coolants, using mineral-free fluids. Apart from the above methods, there is still no other effective way. Meanwhile, in terms of research, many studies have been carried out, one study that has been carried out to help this problem is the modification of adding a device to the radiator inlet with a finned channel that is able to keep the engine temperature at normal temperature, by installing a finned duct or PCM it can save energy. and the machine work is not heavy (Mourid et al., 2018). The inclination angle of the fin plate and the number of fins affect the temperature drop (Wei; et al., 2021).

Based on the reasons mentioned above, the researchers felt the need to conduct research, assessing the effectiveness of the presence of PCM when installed in the radiator inlet, its relationship to engine temperature. The PCM materials that will be used for research are aluminum and ST 37 steel.

2. Research Method and Materials

In the test using a car stand L300, for temperature measurement using a thermoreader and a thermocouple. Two types of PCM were used, made of aluminum and ST 37 steel. It was made like a box measuring 8 cm x 8 cm with a thickness of 1.3 mm in the middle hole with a diameter of 3.5 cm totaling 8 pieces covered with paraffin. Radiator hose, hose clamp, a quades water, and gasolin fuel.

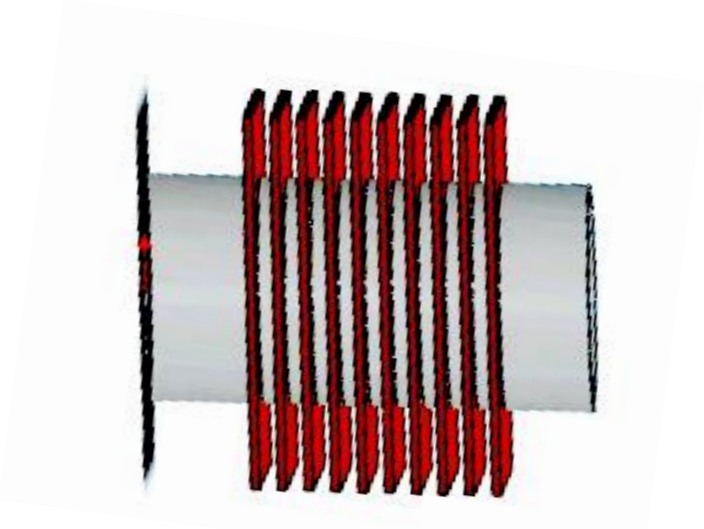

Figure 1. Planned form of PCM

Figure 1 is a plan of the PCM form used in this study, with ST 37 aluminum and iron.

This open access article is distributed under a Creative Commons Attribution (CC-BY-NC) 4.0 license.

ISSN : 2776-7914 (Print) / 2807-3045 (Online)

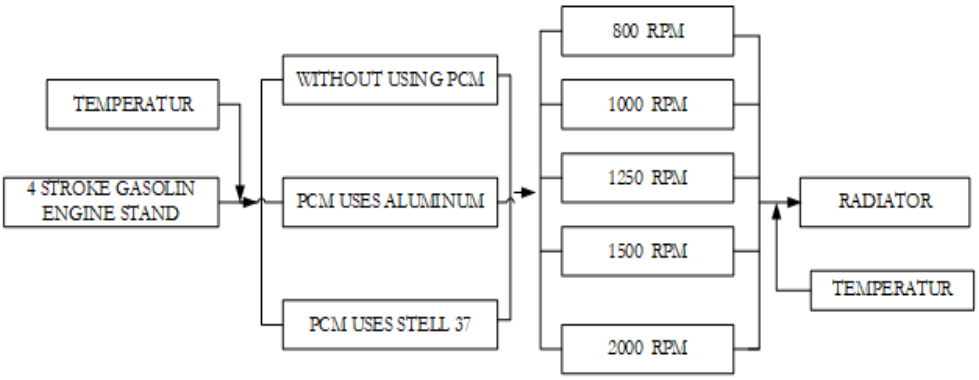

Figure 2. Research flow chart

Figure 2 describes the research flow, taking the cooling water temperature data measured from the cooling water coming out of the engine and after leaving the PCM to the radiator.

3. Results and Discussion

PCM is installed between the outlet engine and radiator inlet, the pipe is fitted with a water coolant temperature check before and after the PCM.

Figure 3. PCM Installation in unit

Figure 3 is a picture of the PCM installation in the engine cooling water inlet and the radiator inlet. The fin-shaped PCM is put in a closed box and filled with paraffin to the brim, then installed as a heat sink which is carried by the cooling water out of the engine.

This open access article is distributed under a Creative Commons Attribution (CC-BY-NC) 4.0 license.

ISSN : 2776-7914 (Print) / 2807-3045 (Online)

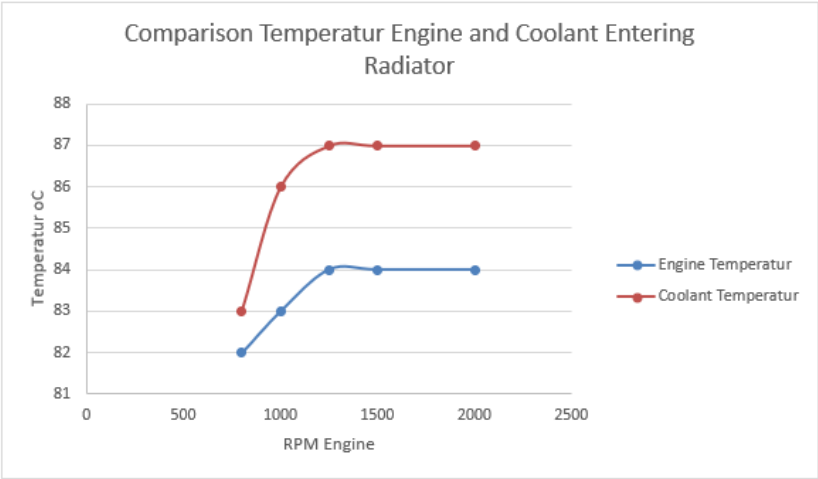

Figure 4. Comparison temperature engine and coolant entering radiator

Figure 4 is a graphic image engine temperature and the temperature of the fill water entering the radiator without passing through the PCM. even though the cooling water temperature is still within the allowable limits, if there is an overheating problem, the radiator work will be heavy and the radiator may be damaged.

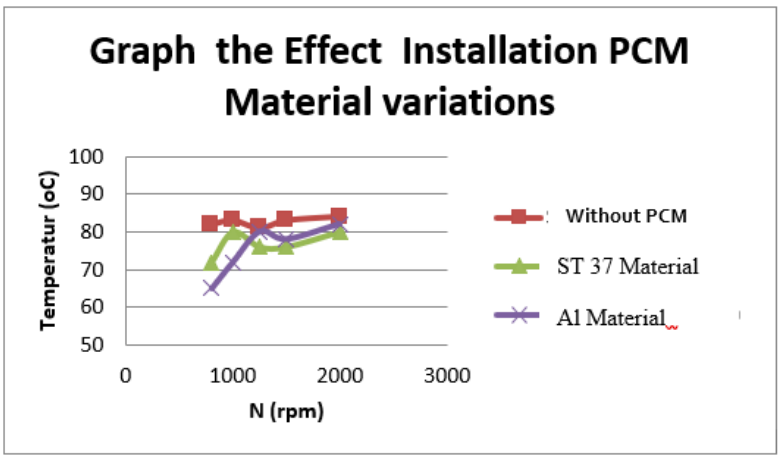

Figure 5. Graph of the relationship between N (Rpm) and engine temperature

The decrease in engine temperature after using PCM, the maximum temperature decrease is 17.5^{0}C, the number of PCM fins affects the temperature decrease. Engine speed at stationary conditions (800 – 1100) PCM from aluminum is more effective, but when the engine speed starts (1250 – 2000) the PCM is made of metal is effective. The difference occurs at rpm starting at 1250, PCM aluminum higher engine temperature occurs because the material properties are very good for the cooling process, with easy heat transfer and heat stored in paraffin. PCM using aluminum allows it to absorb or dissipate heat In terms of materials, aluminum has the property of releasing heat more quickly and is lighter than steel (Kovacik; et al., 2017). Decrease in temperature after using PCM in the radiator inlet is 18,7%. in the study, the heat reduction of the liquid entering the radiator was 16%-53% (Tian Yan, 2021) Another advantage of using PCM is that the temperature of the liquid entering the radiator becomes more stable (Sardari; et al., 2020) (Moldgy, 2016).

This open access article is distributed under a Creative Commons Attribution (CC-BY-NC) 4.0 license.

ISSN : 2776-7914 (Print) / 2807-3045 (Online)

4. Conclusion

From the results of the study, it can be concluded as follows, the decrease in engine temperature after using PCM reaches 17.50C. While the use of PCM is effective where the water coming out of the machine can be reduced by 17.830C.

When viewed from the type of PCM material, it can be concluded that if the engine speed is stationary (800 – 1100) the aluminum PCM is more effective, but if the engine speed starts (1250 – 2000), the effective PCM is metal. The level of difference, especially Rpm from 1250, PCM aluminum, higher engine temperature, occurs because of the excellent properties of the material for the cooling process, with easy heat transfer and heat stored in paraffin.

References

Abuska;, M., Sevik;, S., & Kayapunar, A. (2019). Experimental analysis of solar air collector with PCM-honeycomb combination under the natural convection.pdf. *Solar Energy Matrials And Solar Cells*, *195*, 299–308.

Amin;, M., & Putra, N. (2016). Karakterisasi Phase Change Material Lokal.pdf. *Seminar Nasional Tahunan Teknik Mesin XV (SNTTM XV)*, 539–545.

Dalimunthe, R. (2019). PENGARUH ALIRAN AIR TERHADAP EFEKTIFITAS RADIATOR TOYOTA KIJANG 5-K. *Jurnal Teknika Sains*, *04*(02), 45–54.

Kovacik;, J., Spanielka;, J., Dvorak;, T., Jr;, P. O., & Jers, J. (2017). Closed Cell Alumunium Foams With Phase Change Material. *Metallic Foam*, *1*(1), 42–28.

Moldgy, A. (2016). Study On Thermal Energy Storage Properties Of Organic Phase Change Material For Waste Heat Recovery Applications.pdf. *Materlastoday Proceedings*.

Mourid, A., Alami;, M. Al, & Kuznik, F. (2018). Experimental Investigation On Thermal Behavior And Reduction Of Energy Consumption in real Scale Building By Phase Change Materials On Its Envelope. *Sustainable Cities And Society*.

Nugroho, A. S. (2021). The Effect of Installing Modified Copper in Muffler to Reduce CO Levels in Vehicle Exhaust. *Jurnal E-KOMTEK*, *5*(1), 123–132.

Nugroho, A. S. (2015). Pengaruh Campuran Metanol Terhadap Prestasi Mesin. *SNATIF Ke 2*, 441–446.

Saputra;, E., Effendy;, M., Surono;, A., & Prasetya., A. (2018). Kinerja radiator kendaraan pada berbagai laju aliran udara.pdf. *URECOL 18*.

Sardari;, P. T., Babaei-Mahani;, R., Giddings;, D., Yasseri;, S., Ardekani;, M. M., & Bahai., H. (2020). Energy recovery From Domestic radiators using Compact Composite Metal Foam/PCM Latent Heat Storage. *Journal Pre-Proof*.

Wei;, W., Shoucheng, L., & Wejan, X. (2021). Experimental study on the influence of fin parameters on heat transfer of PCM based radiator. *Energy Storage Science and Technology*, *10*(6).

This open access article is distributed under a Creative Commons Attribution (CC-BY-NC) 4.0 license.